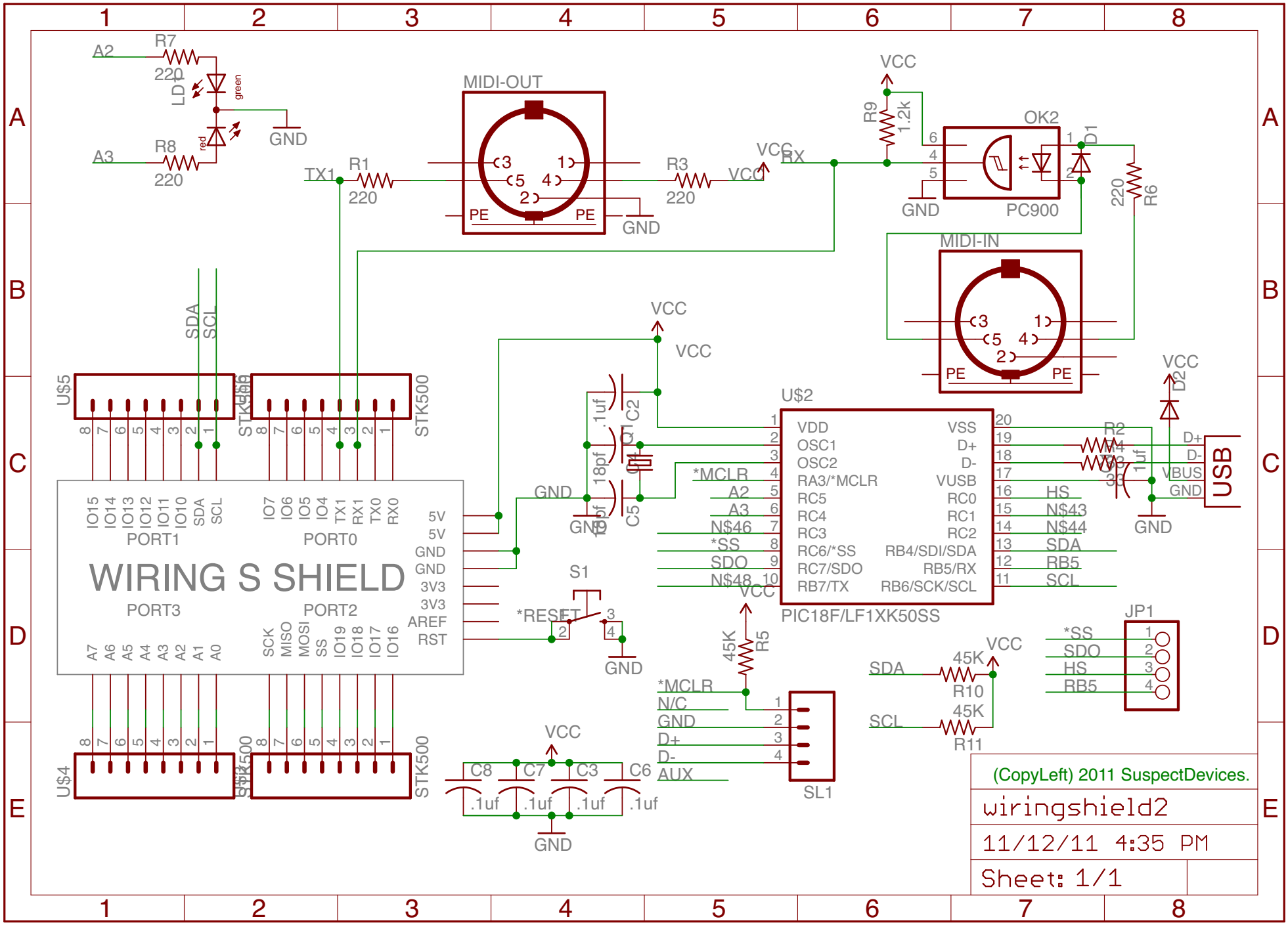
A2
R7
220
LD1
green
red
GND
A3
R8
220
MIDI-OUT
TX1
R1
220
R3
220
VCC
RX
PE
PE
GND
VCC
R9
1.2k
OK2
PC900
D1
220
R6
MIDI-IN
PE
PE
SDA
SCL
U$5
STK500
U$4
STK500
WIRING S SHIELD
PORT1
PORT0
PORT3
PORT2
IO15 IO14 IO13 IO12 IO11 IO10 SDA SCL
IO7 IO6 IO5 IO4 TX1 RX1 TX0 RX0
A7 A6 A5 A4 A3 A2 A1 A0
SCK MISO MOSI SS IO19 IO18 IO17 IO16
5V
5V
GND
GND
3V3
3V3
AREF
RST
VCC
C2
.1uf
18pf
C1
C5
GND
U$2
PIC18F/LF1XK50SS
VDD
OSC1
OSC2
RA3/*MCLR
RC5
RC4
RC3
RC6/*SS
RC7/SDO
RB7/TX
VSS
D+
D-
VUSB
RC0
RC1
RC2
RB4/SDI/SDA
RB5/RX
RB6/SCK/SCL
*MCLR
A2
A3
N$46
*SS
SDO
N$48
HS
N$43
N$44
SDA
RB5
SCL
R2
R4
R3
33
1uf
D2
D+
D-
VBUS
GND
USB
S1
*RESET
GND
45K
R5
*MCLR
N/C
GND
D+
D-
AUX
SL1
SDA
45K
R10
SCL
45K
R11
JP1
*SS
SDO
HS
RB5
C8
C7
C3
C6
.1uf
.1uf
.1uf
.1uf
GND
(CopyLeft) 2011 SuspectDevices.
wiringshield2
11/12/11 4:35 PM
Sheet: 1/1